PERFORMANCE (Performance curves are typical only and not a guarantee of performance)

Head Loss – 2½", 3" and 4"

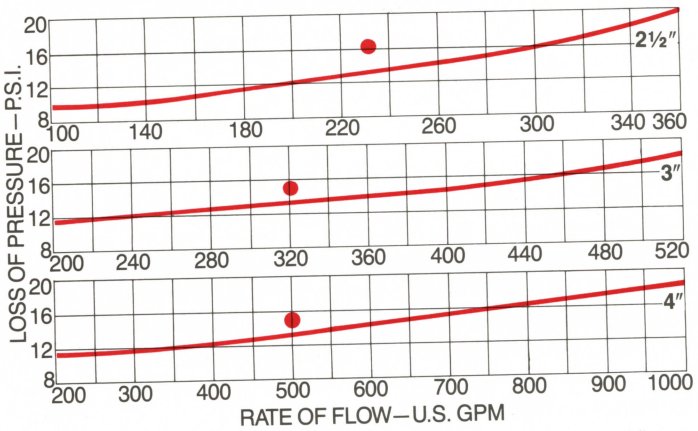

Head Loss – 6", 8" and 10"

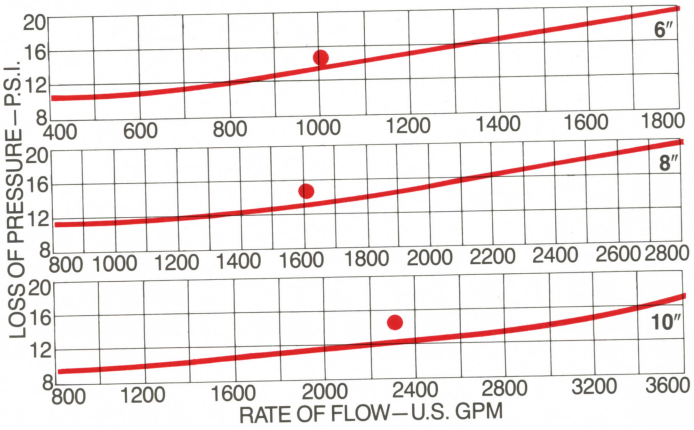

NOTE: ● Maximum Allowable Pressure Loss allowed by USC at indicated flow.

DIMENSIONS

DIMENSIONS	2½"	3"	4"	6"	8"*	10"*
A (bronze)	35"	40"	46½"	62"	–	–
A (iron)	36½"	40"	47½"	62"	75½"	88"
B (bronze)	20"	24"	28½"	41"	–	–
B (iron)	21½"	24⅝"	29½"	41"	52½"	62"
C (bronze)	9¾"	10"	10¾"	12"	–	–
C (iron)	9 13/16"	10"	10¾"	12"	21¼"	22⅜"
D (NRS)	12½"	13⅝"	15¼"	19⅞"	24½"	29¾"
D (OS+Y**)	17⅜"	22 1/16"	25"	32¾"	41½"	48½"
E (bronze & iron)	10⅛"	10⅛"	10⅛"	10⅛"	17⅜"	17⅜"
F (bronze)	4½"	4½"	4¾"	6 3/16"	–	–
F (iron)	5¼"	5¼"	5¼"	6 3/16"	8⅜"	10 3/16"
Size of Test Cocks	½"	½"	½"	¾"	¾"	¾"
Relief Valve Opening	2"	2"	2"	2"	3"	3"

*8" and 10" available in cast iron only
**OS+Y gate valve "D" dimension valve open.

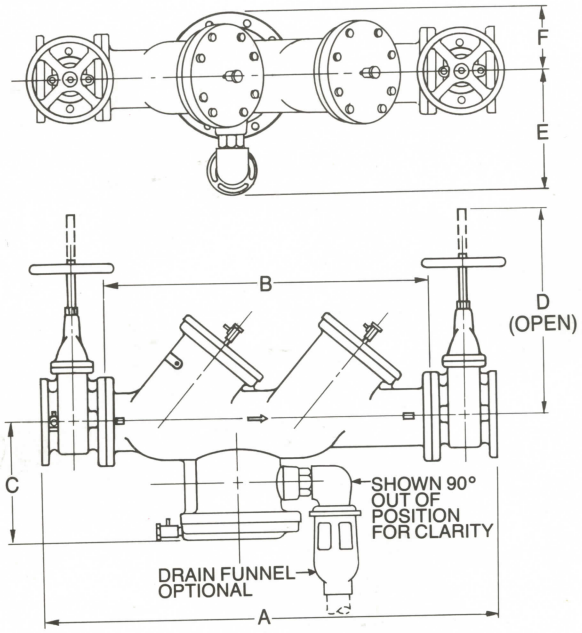

WEIGHTS

SIZE (BRONZE)	2½"	3"	4"	6"
Net Wt. No Valves, Lbs.	130	194	250	548
Net Wt. W/NRS Valves, Lbs.	258	330	430	788
Net Wt. W/OS+Y Valves, Lbs.	218	306	490	875
Gross Wt. No Valves, Lbs.	160	224	280	630
Gross Wt. W/NRS Valves, Lbs.	288	360	470	870
Gross Wt. W/OS+Y Valves, Lbs.	260	362	530	905

SIZE (IRON)	2½"	3"	4"	6"	8"	10"
Net Wt. No Valves, Lbs.	160	206	293	532	1266	1955
Net Wt. W/NRS Valves, Lbs.	264	330	476	874	1876	2769
Net Wt. W/OS+Y Valves, Lbs.	270	340	490	876	1926	2966
Gross Wt. No Valves, Lbs.	190	236	328	622	1370	2100
Gross W/NRS Valves, Lbs.	294	360	526	964	1980	3084
Gross W/OS+Y Valves, Lbs.	300	370	540	966	2030	3136

MATERIALS AND SPECIFICATIONS

Body . . . . . hot-dipped galvanized or epoxy coated cast iron; 2½"–10"
Body . . . . . bronze; 2½"–6"
Working parts . . . . . bronze and stainless steel
Springs . . . . . stainless steel*
Diaphragms . . . . . reinforced elastomer
Valve discs . . . . . silicone rubber
Maximum rated working pressure . . . . . 175 psi
Hydrostatic test pressure . . . . . 350 psi
Temperature range . . . . . 33°–140°F
(Available up to 180°)

*8" and 10" first check springs are carbon steel vinyl-coated.