Series 990

REDUCED PRESSURE ZONE BACKFLOW PREVENTER

Sizes: 4", 6", 8"

The Watts Series 990 Reduced Pressure Zone Backflow Preventers are designed to provide cross-connection control protection of the potable water supply in accordance with national plumbing codes. This series can be utilized in a variety of installations, including health hazard cross-connections in piping systems or for containment at the water meter service line entrance.

Furnished with non-rising stem (NRS) resilient wedge gate valve shut-offs.

FEATURES

- Replaceable bronze seats
- Fused epoxy coated & lined
- Stainless steel reinforced sensing hose
- Stainless steel internal parts
- No special tools required for normal maintenance
- Captured spring assemblies

AVAILABLE MODELS

Suffix:

NRS RW - with non-rising stem resilient wedge gate valves (Standard)

S-FDA - with FDA approved epoxy coated strainer

OSYRW - with (UL/FM) outside stem & yoke resilient wedge gate valves

QT-FDA - with FDA approved epoxy coated, full port, resilient seated ball valves shutoffs

SPECIFICATIONS

A reduced pressure zone backflow prevention assembly shall be installed at each cross-connection to prevent back-siphonage and back pressure backflow of hazardous materials into the potable water supply. The assembly shall consist of a pressure differential relief valve, located in a zone between two positive seating 300 series stainless steel check modules. The check modules shall be constructed with captured center stem guided springs and rubber seated discs housed in a ductile iron body. The check module seats and seat discs shall be replaceable. The valve assembly shall have a raised edged seat for repeatable valve opening and drip tight seating. Seat retention shall be such that threads or bolts are not exposed to line fluids. The clapper assembly shall have a floating lower hinge pin to allow for automatic self centering disc/seat compression. The relief valve shall be of bronze construction with 300 series stainless steel seat and piston. The compact relief valve shall be bottom mounted and supplied with a steel reinforced sensing hose. The main valve body shall be internally/externally coated with a FDA approved fusion bonded epoxy coating. The assembly shall include two resilient shutoff valves and four ball type test cocks. The assembly shall be a Watts Regulator Series 990.

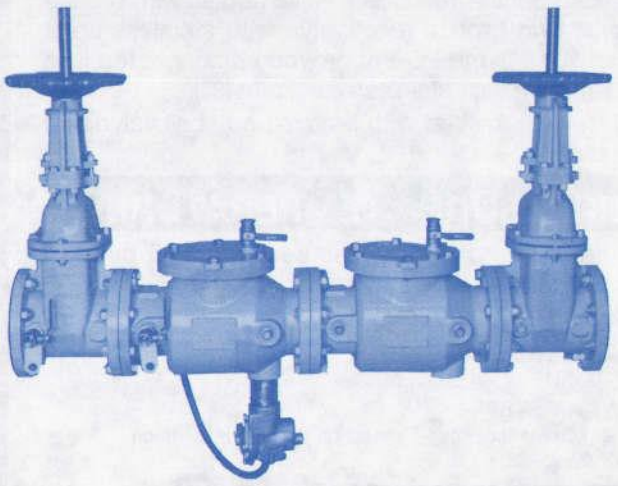

Toggle Linkage Patent No. 5176172

990 OSYRW

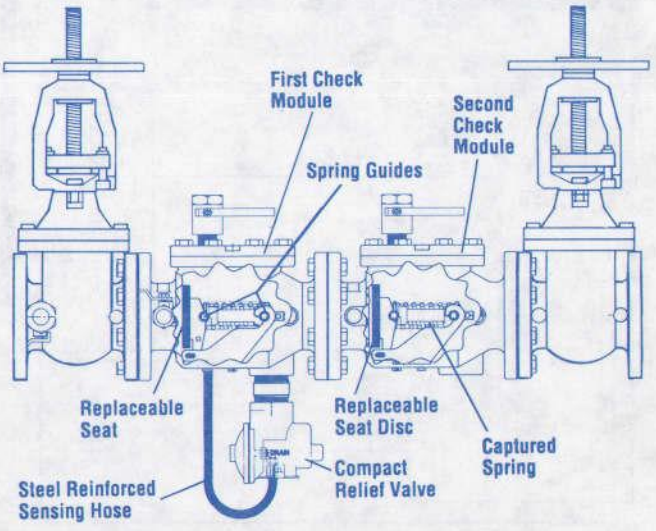

IMPORTANT: Inquire with governing authorities for local installation requirements.

A LEADER IN VALVE TECHNOLOGY
WATTS REGULATOR
Since 1874 — Watts Industries, Inc.
Water Products Division • Safety & Control Valves

USA: 815 Chestnut Street, North Andover, MA 01845-6098
Canada: 441 Hanlan Rd. Woodbridge, Ontario L4L 3T1

MATERIALS

No. 990 sizes 4" - 8" have FDA approved epoxy coated ductile iron check valve bodies with bronze seats and bronze relief valve with stainless steel trim (4", 6") and FDA approved epoxy coated iron relief valve with stainless steel trim (8").

All sizes furnished with bronze body ball valve test cocks.

PRESSURE - TEMPERATURE

Suitable for supply pressure up to 175 psi and water temperatures to 110°F.

STANDARDS

ASSE 1013
AWWA, CSA B64.4
USC Manual for Cross-Connection Control, 8th Edition
IAPMO PS-31

APPROVALS

ASSE, AWWA, CSA
IAPMO
Approved by the Foundation for Cross-Connection Control and Hydraulic Research at the University of Southern California (sizes 4" and 8" only).†
UL classified and FM listed with UL/FM OS&Y gate valves.†

DIMENSIONS - WEIGHTS

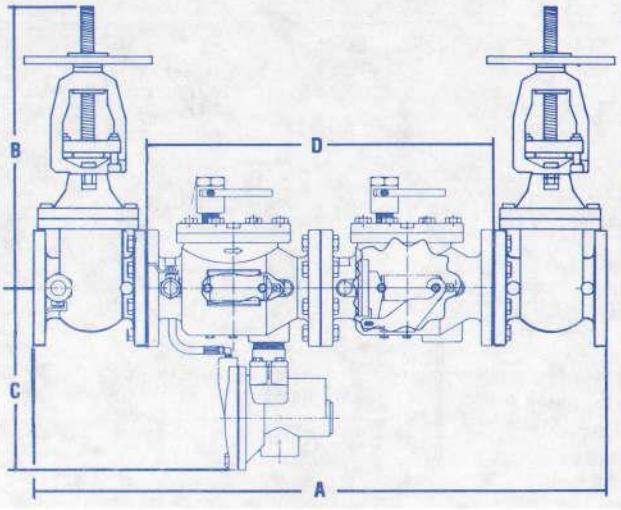

CAPACITY

As compiled from documented Foundation for Cross-Connection Control and Hydraulic Research at the University of Southern California lab tests.

*Typical maximum mechanical/irrigation system flow rate (7.5 feet per second)
**Typical maximum fireline system flow rate (15.0 feet per second)

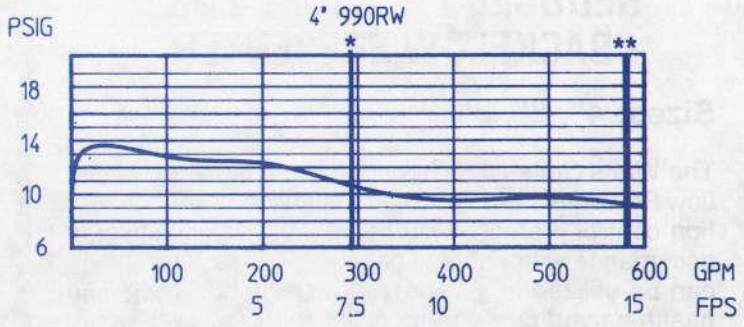

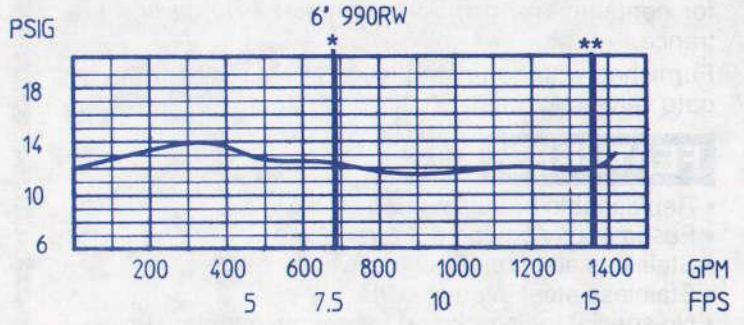

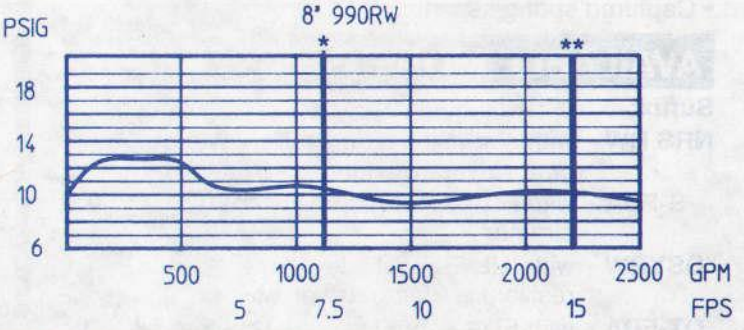

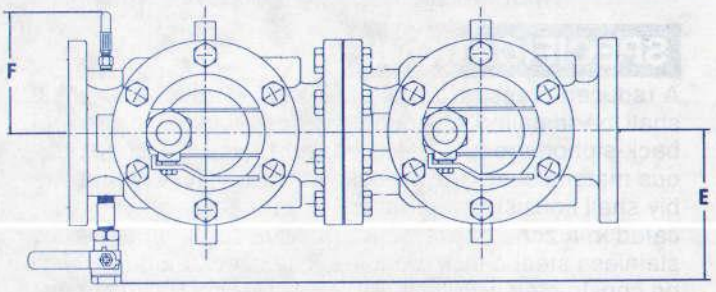

Size (Inches)	Dimensions (Inches) B									Weight (lbs.)			(Optional)
	A	OS&Y	NRS	C	D	E	F	G	H	NRSRW	OSYRW	QTFDA	77F-D-FDA Strainer
4	46⅞	23⅜	15½	16½	28⅞	7⅞	9³⁄₁₆	12	8¼	327	349	267	60
6	58⅜	30	19⅝	18	37⅜	8¹¹⁄₁₆	10	18½	13½	587	615	521	133
8	69⅞	40	24	19¹³⁄₁₆	46⅞	8¾	8¹³⁄₁₆	21⅝	15½	1067	1121	1763	247

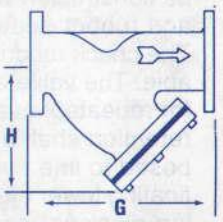

A LEADER IN VALVE TECHNOLOGY
WATTS® REGULATOR
Since 1874 — Watts Industries, Inc.
Water Products Division • Safety & Control Valves

USA: 815 Chestnut Street, North Andover, MA 01845-6098
Canada: 441 Hanlan Rd. Woodbridge, Ontario L4L 3T1

ISO 9001 CERTIFIED

©Watts Regulator, 1995 - Printed in U.S.A.