Model RP-2

Sizes ¾" thru 1½"

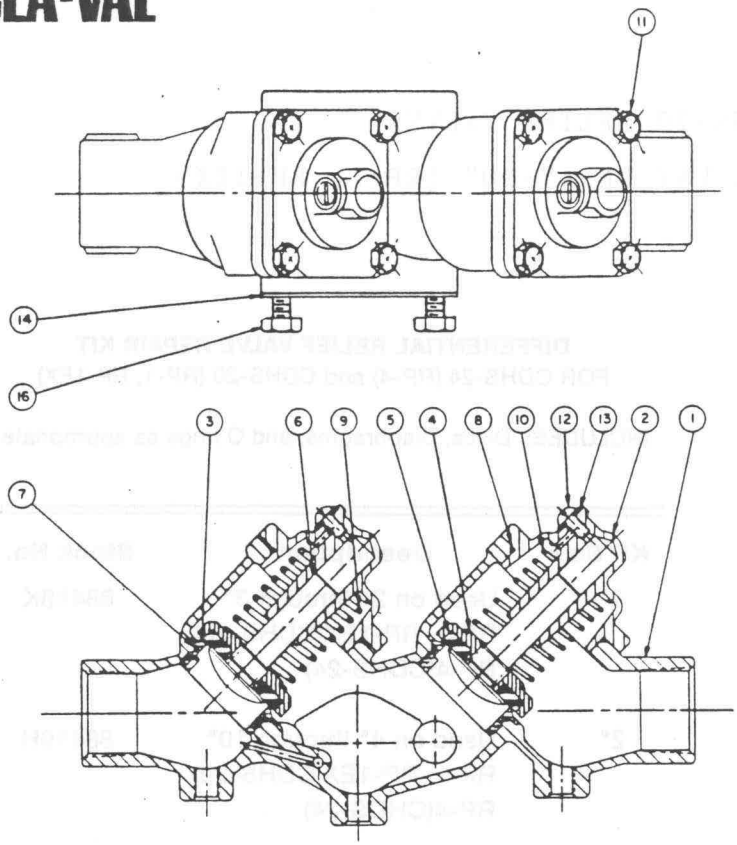

RP-2 ¾" & 1".....

PARTS LIST (MAIN VALVE)

ITEM NO.	DESCRIPTION	QTY.
1	BODY	1
2	COVER	2
3	SEAT	2
4	RETAINER, DISC	2
* 5	DISC	2
6	STEM	2
7	O-RING, SEAT	2
* 8	O-RING, COVER	2
9	SPRING, #1 CHECK	1
10	SPRING, #2 CHECK	1
11	BOLT, HEX HEAD	8
12	SCREW, ROUND HEAD	2
* 13	WASHER	2
* 14	GASKET	1
16	BOLT, HEX HEAD	2

MAIN VALVE REPAIR KIT

FOR ¾" through 1 ½" RP-2 and D-2

INCLUDES: Discs and O Rings for BOTH main check valves.

Kit Size	Description	Stock No.
1"	Used on ¾" and 1"	88415F
1½"	Used on 1¼" and 1½"	88416D

RP-2 1¼" & 1½".....

PARTS LIST (MAIN VALVE)

ITEM NO.	DESCRIPTION	QTY.
1	BODY	1
2	COVER	2
3	SEAT	2
4	RETAINER, DISC	2
* 5	DISC	2
6	(Deleted)	-
7	STEM	2
8	(Deleted)	-
9	O-RING, SEAT	2
* 10	O-RING, COVER	2
11	(Deleted)	-
12	SPRING, #1 CHECK	1
13	SPRING, #2 CHECK	1
14	BOLT, HEX HEAD	8
15	SCREW, ROUND HEAD	2
* 16	WASHER	2
* 17	GASKET	1
19	BOLT, HEX HEAD	2

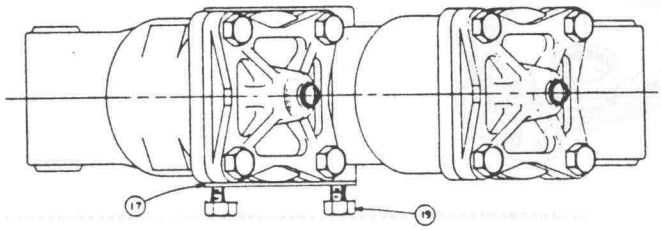

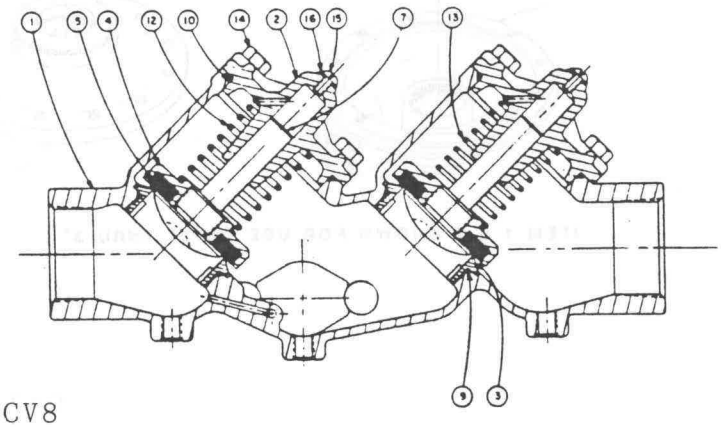

Model RP-2

Sizes ¾" thru 1½"

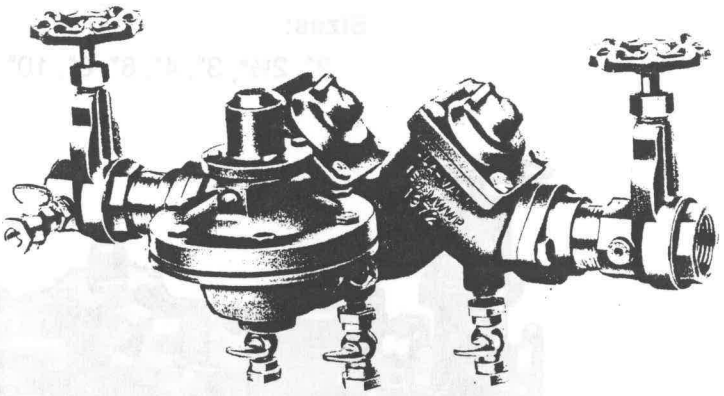

¾" CDHS-20

PRESSURE DIFFERENTIAL RELIEF VALVE

For Model RP-2 Backflow Preventers in Sizes ¾" thru 1½"

EXPLODED VIEW

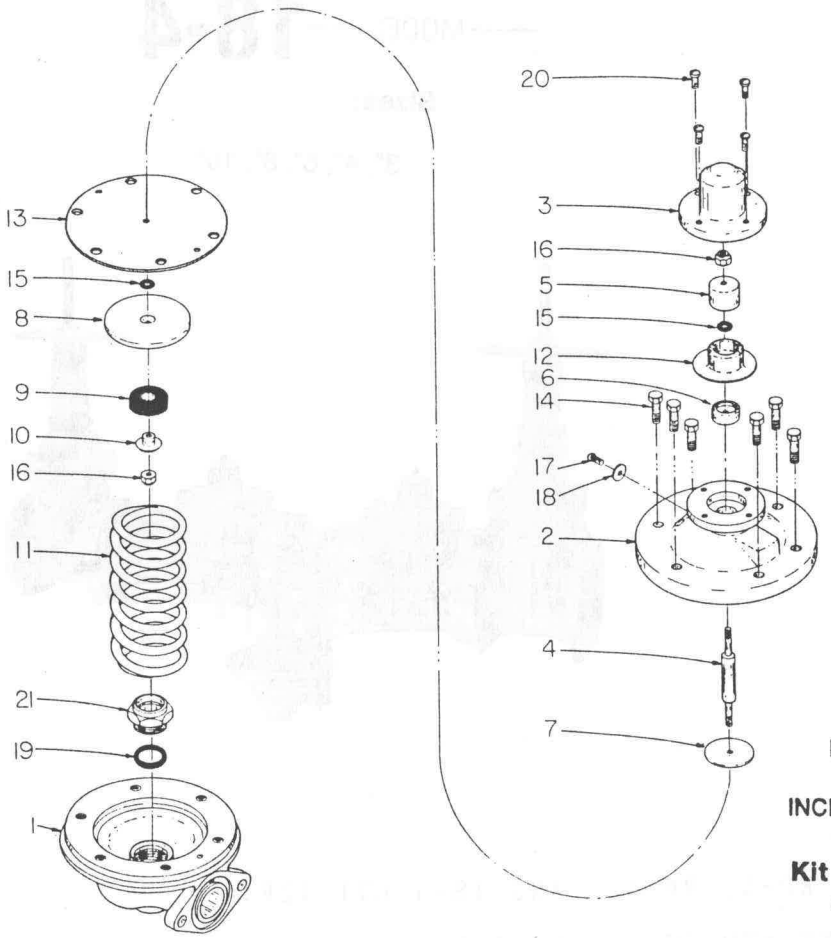

PARTS LIST

ITEM NO.	PART DESCRIPTION	QUAN. PER UNIT
1	Body	1
2	Body Assembly, Intermediate	1
3	Cover	1
4	Stem	1
5	Piston	1
6	Plate, Retainer	1
7	Washer, Diaphragm	1
8	Retainer, Disc	1
• 9	Disc	1
10	Guide, Disc	1
11	Spring	1
•12	Bellofram	1
•13	Diaphragm	1
14	Screw, Hex Head	6
•15	O-Ring, Stem	2
•16	Nut, Self-locking	2
17	Screw, Round Head	1
•18	Washer	1
19	O-Ring, Seat	1
20	Screw, Fil. Head	4
21	Seat	1

DIFFERENTIAL RELIEF VALVE REPAIR KIT
FOR CDHS-24 (RP-4) and CDHS-20 (RP-1, RP-1EX)

INCLUDES: Discs, Diaphragms, and O rings as appropriate.

Kit Size	Description	Stock No.
¾"	Used on all ¾" through 1½" RP2's	88417B